Device Parameter

Working Voltage: DC 12V
Working Current: Non-loaded <200mA
Working Temperature: -20°C - 50°C (-4°F - 122°F)
Working Humidity: 10° - 90°
Power Consumption: <3W
Size: 178 x 120 x 20mm (7.0 x 6.69 x 0.79in.)
Communication Mode: TCP/IP
Communication Rate: 10/100M (TCP/IP)
Extension Communication: RS485
Users Capacity: 20000
Record Capacity: 70000
Max. Door: 4
Dry Contact Input: 5
Dry Contact Output: 12
Access Group: 200 Groups
Default IP Address: 192.168.0.245
Default Communication Password: NULL

IMPORTANT: These access control panels (Version 2.0) are only compatible with access control panels (Version 2.0) and with the Titan VSAxess software. They are not compatible with access control panels (Version 1.0) nor with VSAxess software.

Basic Function

- First card open
- Multi-card open
- Anti-passback
- Multi-door interlock
- Card, password, card+password, card or password open mode
- Different time differente open mode
- Transmission encryption setup
- Self-checking function
- Remote control
- Wiegand format can be self-defined
- Add card without software
- Multi-channel conection (max. 3 channels)
- Real-time events active or passive upload
- Arm/disarm by card
- Arm/disarm by software
- Relieve alarm by software
- Multi-event linkage alarm
- One event related to multi-relay trigger
- Alarm delay turn off
- Capacity can be expanded
- Self-defined door lock relay
- Self-defined control door quantity
- Door latch mode
- Active door normal open mode by card
- Timed automatic normal open mode
- Timed invalid for exit button
- Normal open time
- Normal open holiday forbidden schedule
- Access time schedule
- Forbid access holiday schedule
- Door lock delay setup
- Access group setup
- Threaten code setup
- Force open/close door
- Open door by software
- Relieve normal open by card
- Relieve card and card valid date setup
- Expand RS485 communication
- Real-time monitoring door and relay state

VISIONIS®
Technology Within Your Reach

Commercial Access Control
VIS-AXESS-4D-ETL-PCB

User Guide

CE FC MA

www.visionistech.com

Wiring Introduction

Wiring Position	Wire Model	Remark
Power Supply - Access Controller	RVV2*1.0	Distance < 100M
Access Controller - Reader	RVV4*0.5	Distance 60M, max. can not over 100M.
Access Controller - Electric Lock	RVV4*1.0 (Door-magnet feedback)	Distance < 150M
Access Controller - Exit Button	RVV2*0.5	Distance < 200M
Access Controller - IR Alarm	RVV2*1.0	Distance < 200M
Access Controller - Sound-light Alarm	RVV2*1.0	Distance < 150M
RS485 Communication Cable	RVVP2*1.0	Distance < 1000M, shield layer connect to ground
TCP/IP Communication Cable	CAT-5	Distance < 100M

Disclaimer

The document provides information according to products specification. Visionis does not undertake any type of guarantee, express or implied warranties, including any implied merchantability, specific purposes or the infringement. The information in the document are changed without prior notice. Visionis and its associated sales agents special statement does not assume the result of the use of Visionis equipment of any and all direct, indirect, special, in general, by chance, inevitably, punitive damages. Any user's improper operation or use of the environment problem caused by direct or indirect losses, user pays full responsibility, equipment manufacturers and related sales agents does not undertake any responsability.

Connection

I/O	Device	Standard	Quantity	Setup
Input	Reader	Wiegand 26-40	2/4	as function
Output	Electric Lock	Switch Signal	2/4	as doors
Input	Door-magnet	Switch Signal	2/4	Support
Output	Sound-light alarm	Switch Signal	1	
Input	IR Sensor/Smoke Sensor/Others	Switch Signal	2/4	
Input	Exit button	Switch Signal	2/4	Support
Input	RS485 device	Communication	1	

LED&Button Instruction

LED	RL1	RL2	RL3	RL4	RL5
Two-door	Lock1	Lock2	Magnet Alarm1	Magnet Alarm2	Alarm Output1
Four-door	Lock1	Lock2	Lock3	Lock4	Alarm (COM)

- Power: 12V power LED
- RUN: Device run LED
- RDOK: Read card status LED
- 4DOOR: The status LED of 4 doors
- RESET Key: It is used to reboot device and clear communication password. After power off, power on device again and press RESET button for 3 seconds, then you can clear communication password

Wiring Diagram of Access Controller

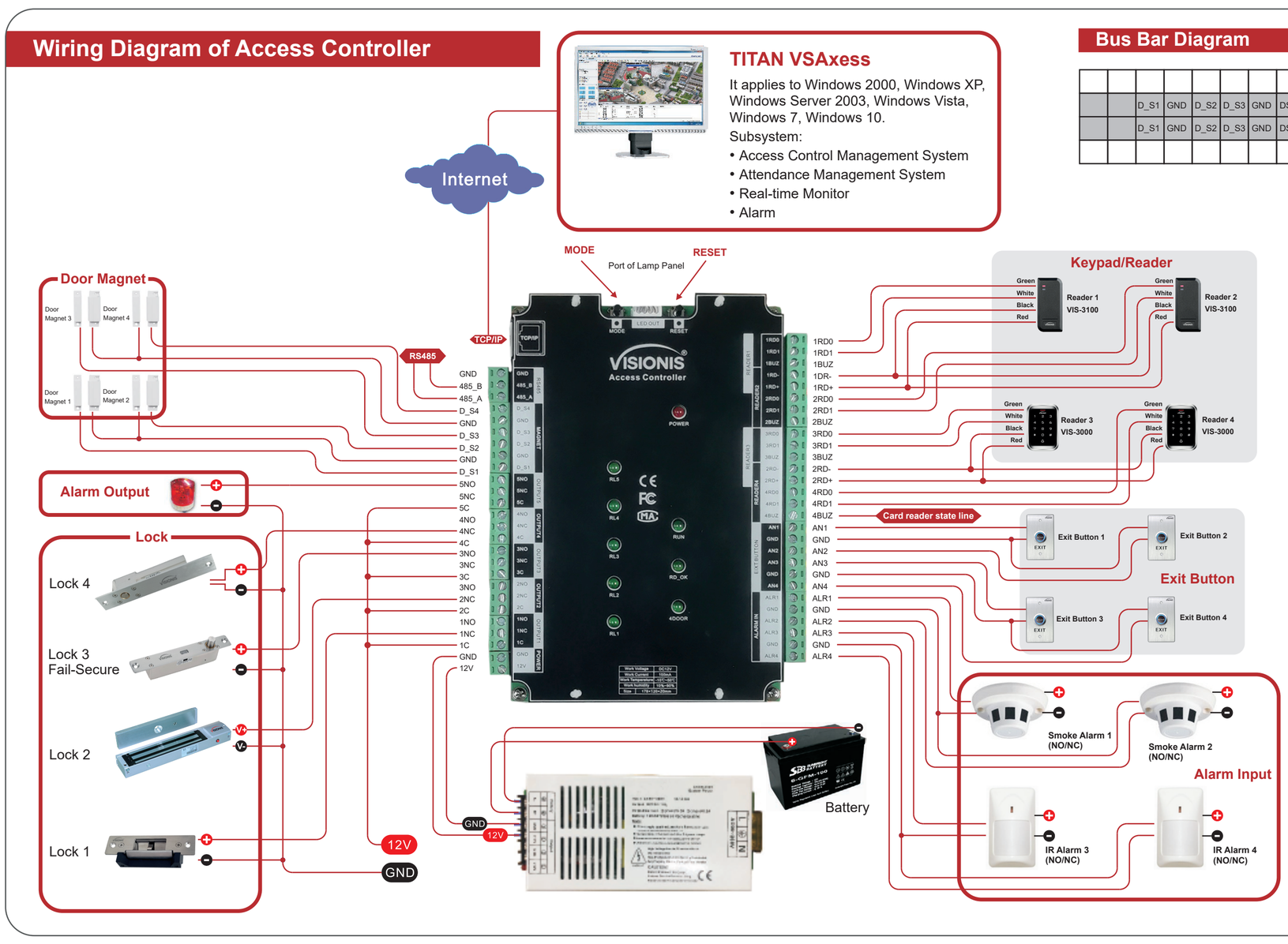

Bus Bar Diagram

																	1C	1NC	1NO	2C	2NC	2NO	3C	3NC	3NO	4C	4NC	4NO	5C	5NC	5NO
			D_S1	GND	D_S2	D_S3	GND	DS_4	ALR3	ALR2	GND	ALR1	AN4	GND	AN3	AN2	GND	AN1	4RD1	4RD0	2RD+	2RD-	3RD1	3RD0	2RD1	2RD0	1RD+	1RD-	1RD1	1RD0
			D_S1	GND	D_S2	D_S3	GND	DS_4	ALR3	ALR2	GND	ALR1	AN4	GND	AN3	AN2	GND	AN1	4RD1	4RD0	2RD+	2RD-	3RD1	3RD0	2RD1	2RD0	1RD+	1RD-	1RD1	1RD0
																	1C	1NC	1NO	2C	2NC	2NO	3C	3NC	3NO	4C	4NC	4NO	5C	5NC	5NO

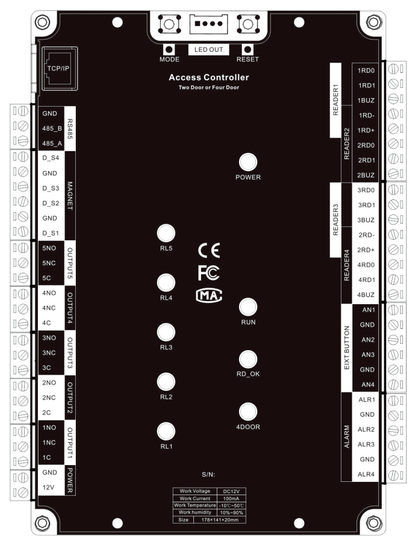

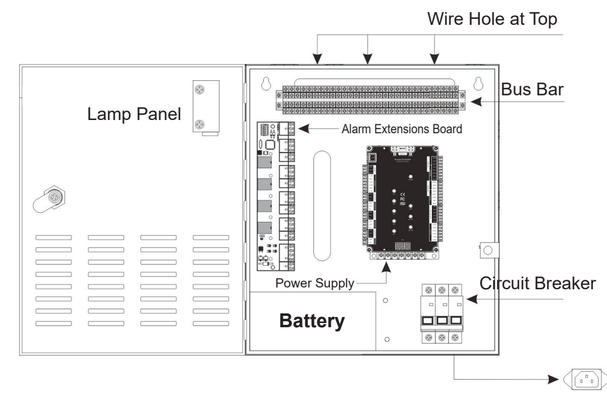

Quick Start

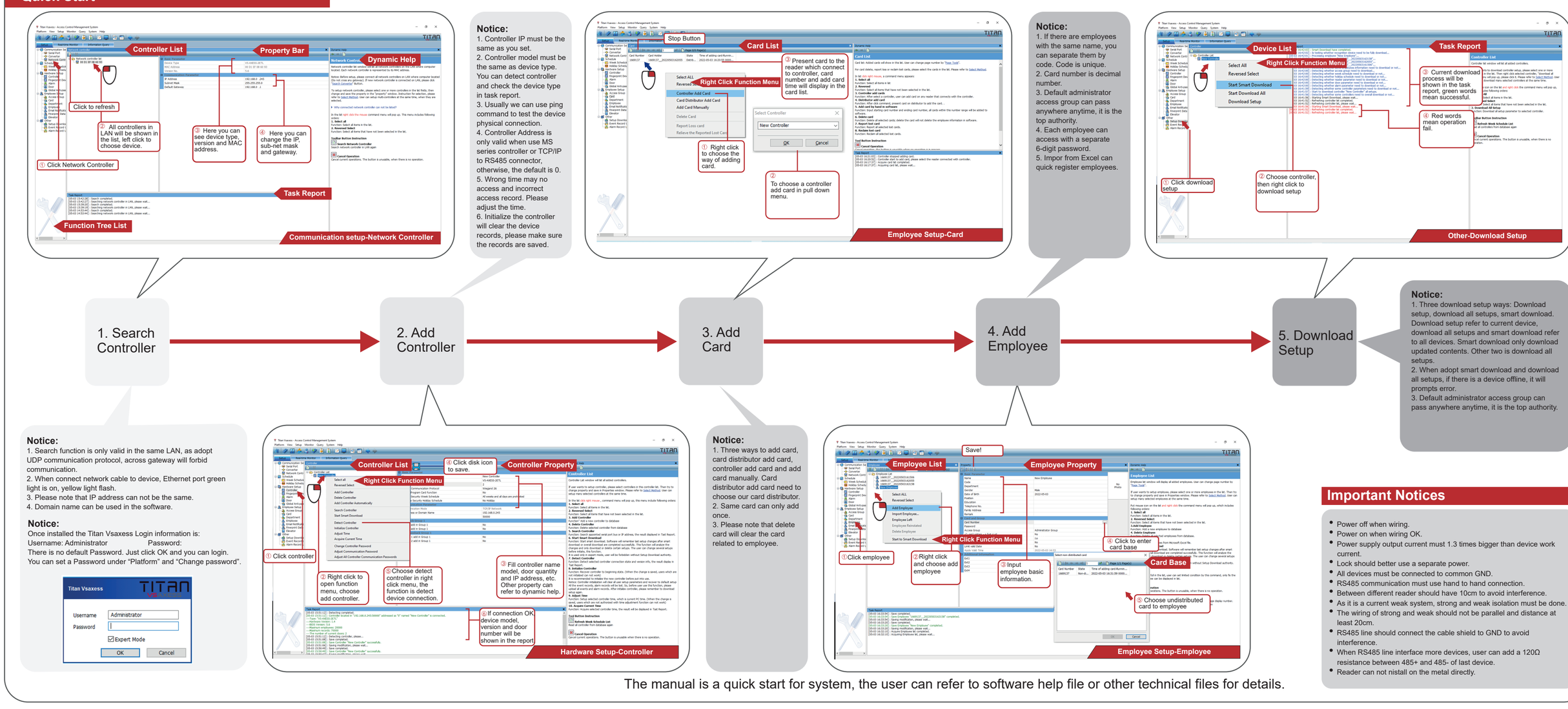

1. Search Controller → 2. Add Controller → 3. Add Card → 4. Add Employee → 5. Download Setup

Notice:
1. Download setup ways: Download setup, download all setups, smart download. Download setup refer to current device, download all setups and smart download refer to all devices. Smart download only download updated contents. Other two is download all setups.
2. When adopt smart download and download all setups, if there is a device offline, it will prompts error.
3. Default administrator access group can pass anywhere anytime, it is the top authority.

Notice:
1. Search function is only valid in the same LAN, as adopt UDP communication protocol, across gateway will forbid communication.
2. When connect network cable to device, Ethernet port green light is on, yellow light flash.
3. Please note that IP address can not be the same.
4. Domain name can be used in the software.

Notice:
Once installed the Titan Vsaxess Login information is:
Username: Administrator Password:
There is no default Password. Just click OK and you can login. You can set a Password under "Platform" and "Change password".

Notice:
1. Three ways to add card, card distributor add card, controller add card and add card manually. Card distributor add card need to choose our card distributor.
2. Same card can only add once.
3. Please note that delete card will clear the card related to employee.

The manual is a quick start for system, the user can refer to software help file or other technical files for details.

Important Notices

- Power off when wiring.
- Power on when wring OK.
- Power supply output current must 1.3 times bigger than device work current.
- Lock should better use a separate power.
- All devices must be connected to common GND.
- RS485 communication must use hand to hand connection.
- Between different reader should have 10cm to avoid interference.
- As it is a current weak system, strong and weak isolation must be done.
- The wiring of strong and weak should not be parallel and distance at least 20cm.
- RS485 line should connect the cable shield to GND to avoid interference.
- When RS485 line interface more devices, user can add a 120Ω resistance between 485+ and 485- of last device.
- Reader can not install on the metal directly.
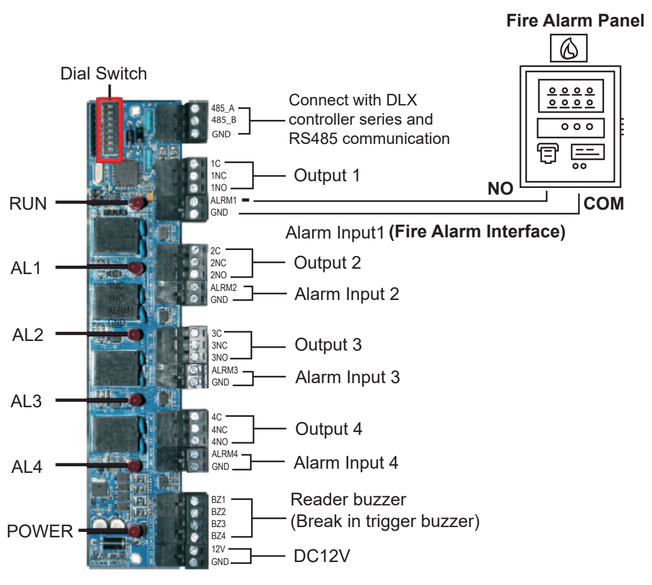
Alarm Extension Board Diagram